MATERIAL AND SURFACE PROCETION	
I	Al JED-029 M1/C JED-259
II	PBT-GF JED-352-1
III	JED-051 M4 JED-378
IV	POM JED-005 M1
V	NBR JED-235
VI	AL JED-077 M1/JED-007-1
VII	PET-GF JED-357-1
VIII	Fe JED-048 M1/phos./JED-371
IX	45H JED-256-1
X	JED-050-M1 JED-256-3

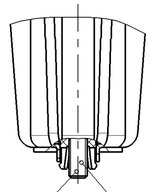

ADJUSTING SCREW VARIANT
VARIANTE EINSTELLSCHRAUBE B IX
VARIANTE VIS DE REGLAGE
VARIANTE VITE DI REGOLAZIONE

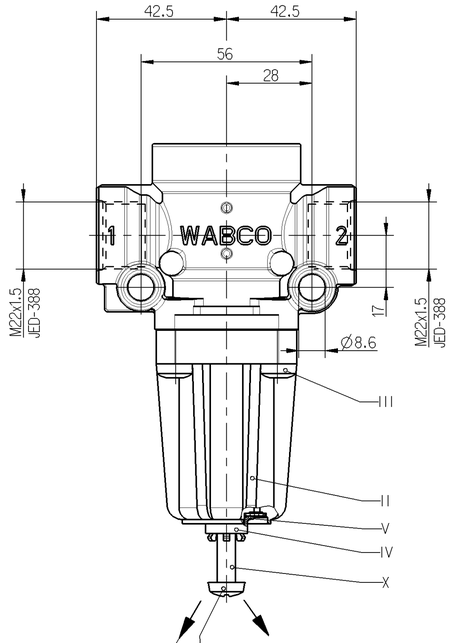

EXHAUST
ENTLUEFTUNG
ECHAPPMENT
SCARICO

ADJUSTING SCREW VARIANT
VARIANTE EINSTELLSCHRAUBE A
VARIANTE VIS DE REGLAGE
VARIANTE VITE DI REGOLAZIONE

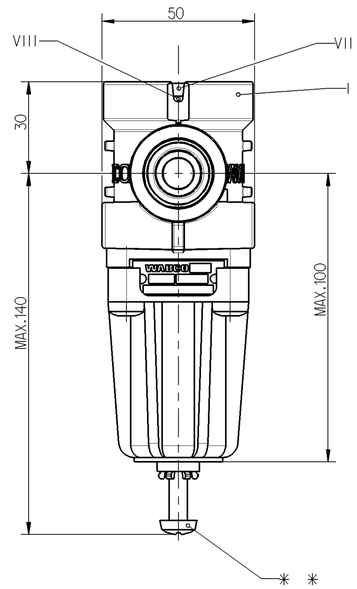

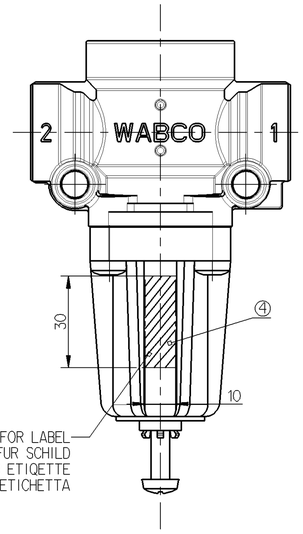

SPACE FOR LABEL
PLATZ FUR SCHILD
ESPACE POUR ETIQETTE
SPAZIO PERETICHETTA

MEDIUM: AIR
MEDIUM: LUFT
FLUIDE: AIR
FLUIDO: ARIA

THERMAL RANGE OF APPLICATION:
THERMISCHER ANWENDUNGSBEREICH:
GAMME D' APPLICATION THERMIQUE:
CAMPO DI APPLICAZIONE TERMICA: -40° ... +80°C

NOMINAL DIAMETER / NENNWEITE / DIAMETRE NOMINAL / DIAMETRO NOMINALE
SUPPLY: / BELUEFTUNG: / ALIMENTATION: / ALIMENTAZIONE: Ø10
EXHAUST: / ENTLUEFTUNG: / ECHAPPEMENT: / SCARICO: Ø4

INSTALLATION POSITION AS DRAWN
EINBAULAGE WIE GEZEICHNET
POSITION D' INSTALLATION SUIVANT DESSIN
POSIZIONE DI MONTAGGIO COME DISEGNATO ±45°
PROTECTED / GESCHUETZT / PROTEGES / PROTETTI ±90°

1 = INLET PRESSURE / EINGESTEUERTER DRUCK / PRESSION D' ALIMENTATION / PRESSIONE DI ALIMENTAZIONE — pe max.=20bar

2 = DELIVERY PRESSURE / AUSGESTEUERTER DRUCK / PRESSION DELIVREE / PRESSIONE EROGATA

TORQUE FOR CONNECTIONS:
ANZUGSMOMENT FUER EINSCHRAUBSTUTZEN:
COUPLE DE SERRAGE DES RACCORDS:
COPPIA DI SERRAGGIO DEI RACCORDI: M22x1.5 : Mmax.=53 Nm

* SMALLER AIR FLOW / GERINGERER LUFTSTORM / DEBIT D' AIR INFERIEUR / PORTATA D' ARIA MINORE

* * ADJUSTMENT MARKED WITH PAINT / EINSTELLUNG MIT LACK GEKENNZEICHNET / AJUSTAGE MARQUE AVEC VERNIS / REGOLAZIONE MARCATO CON VERNICE

* * * ADJUSTING SCREW VARIANT / VARIANTE EINSTELLSCHRAUBE / VARIANTE VIS DE REGLAG / VARIANTE VITE DI REGOLAZIONE

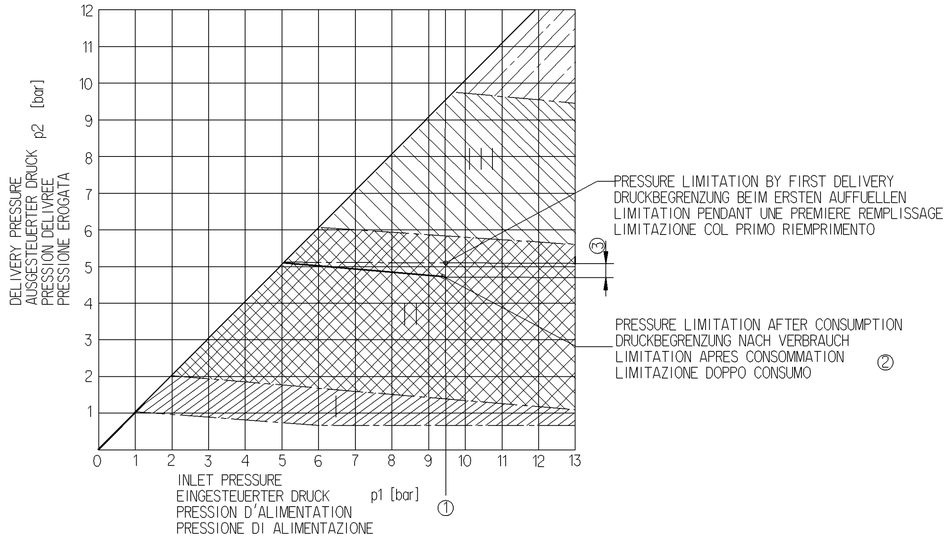

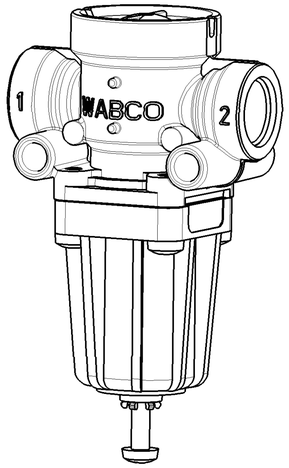

X

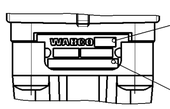

DESIGN PERMISSIBLE
AUSFUEHRUNG ZULAESSIG
REALISATION ADMISE
DISEGNO AMMISSIBILE

① P1 [bar]	② P2 [bar]	③ MAX. [bar]	* * *	WABCO	CUSTOMER'S NO. KUNDEN-NR. NO. CLIENT NO. CLIENTE	RANGE OF ADJUSTMENT EINSTELLBEREICH GAMME DE REGLAGE CAMPO DI REGOLAZIONE		ZGS	CAD	COLOUR OF LABEL FARBE DES SCHILDES COULEUR DE L' ETIQUTTE COLORE DELL' ETICHETTA ④
12.3	8.5 +0/-0.4	0.4	B	475 010 339 0			*			SALMON ORANGE RAL2012
12.3	10 +0.2/-0	0.4	B	475 010 338 0			*			TRAFFIC BLUE RAL5017 ⓪
10	8.5 +0/-0.4	0.4	B	475 010 335 0			*			TELEMAGENTA RAL4010
7.5	2.5 +0/-0.3	0.4	B	475 010 334 0			*			
12.5	9.3 +0.3/-0.3	0.4	A	475 010 333 0						
10	3.5 +0.3/-0	0.4	B	475 010 332 0			*			
12	8 +0/-0.2	0.4	B	475 010 331 0			*			
12	6.5 +0.3/-0	0.5	B	475 010 330 0			*			
10	5.0 +0.2/-0	0.4	A	475 010 329 0			*			
10	2.5 +0.3/-0	0.4	A	475 010 328 0						
12.3	8.5 +0.2/-0	0.4	A	475 010 326 0						
10	3.5 +0.3/-0	0.4	A	475 010 325 0						
8	4.6 +0.2/-0	0.4	A	475 010 323 0						
8	4.2 +0.2/-0	0.4	A	475 010 322 0						
7.5	6.0 +0.3/-0	0.4	A	475 010 321 0						
7.5	5.5 +0.2/-0	0.4	A	475 010 320 0						
12	7.5 +0.3/-0	0.4	A	475 010 319 0						
12	8.0 +0/-0.2	0.4	A	475 010 318 0						
12	6.5 +0.3/-0	0.5	A	475 010 317 0						
7.5	5.7 +0.3/-0	0.4	A	475 010 316 0						
7.5	5.3 +0.3/-0	0.4	A	475 010 315 0						
10	7.0 +0.3/-0	0.4	A	475 010 314 0						

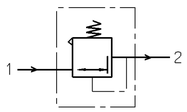

114542	1 x 0	21-09-07
114188	3 x N	24-07-07
112900	2 x M	30-03-07
OCN-No.	Rev.	Date
State of Revision		

General Specification: JED-334-0
Further Technical Data:
Doc. Code: Sheet: To
General Tolerances JED-261

Class 1)	Range of Nominal Dimensions (± mm) ≤ 50	> 50 ≤ 180	> 180 ≤ 400	> 400	∢
Fine		0.5	1.0	1.5	2.0	
Medium	X	1.0	2.0	3.0	4.0	±3°
Coarse		2.0	3.5	5.0	6.5	

Tapped Holes acc. JED-152
1) Tolerance Class Applied Crossmarked

Copyright WABCO ®

Date	Signature
Drawn 2007-09-21	MOLYN
Checked 2007-09-21	Dr. Willms
Expert MOLYN	

WABCO

PRESSURE LIMITING VALVE
DRUCKBEGRENZUNGSVENTIL
VALVE DE LIMITATION DE PRESSION
VALVOLA LIMITATRICE DI PRESSIONE

Mass	Scale	Material No.	WABCO Id. No.: 4750103980		
0.385 KG	1:1	475 010 398 0	Doc. Code 053	Language en/de fr/it	Sheet 1/1
Size A 1	TRI 530		Function Code	CAD System Pro/E	Prod.Type
			Replacement for		

100mm

Toute Communication ou reproduction de ce document, toute exploitation ou communication de son contenu sont interdites, sauf autorisation expresse. Tout manquement à cette règle constitue un délit évident et expose son auteur au paiement de dommages et intérêts. Tous droits réservés, notamment en cas de dépôt de brevet, d'enregistrement d'un modèle d'utilité ou d'un dessin ou modèle.

Weitergabe sowie Vervielfältigung dieser Unterlage, Verwertung und Mitteilung ihres Inhalts nicht gestattet, soweit nicht ausdrücklich zugestanden. Zuwiderhandlungen stellen strafrechtlichen Missbrauch dar und verpflichten zu Schadensersatz. Alle Rechte sind für den Fall der Patenterteilung oder Gebrauchsmustereintragung vorbehalten.

Non è permesso consegnare a terzi o riprodurre questo documento, né utilizzare il contenuto o renderlo comunque noto a terzi senza dichiarazione esplicita. Ogni violazione costituisce un illecito doloso e comporterà il risarcimento dei danni subiti. Tutti i diritti, in particolare quelli di brevetto, di registrazione di modello di utilità o di disegno o modello, sono riservati.

Copying of this document and giving it to others and the use or communication of the contents thereof, are forbidden without express authority. Contravention of this rights will render the offender liable for the payment of damages. All rights are reserved in the event of the grant of patent, registration of a utility model or design or pattern.