MATERIAL AND SURFACE PROTECTION	
I	Al JED-029 M1/C JED-259
II	PBT-GF JED-352.1
III	Fe JED-051 M1/Zn/C JED-256
IV	POM JED-005 M1
V	NBR JED-235
VI	AL JED-077 M1/JED-007.1
VII	PET-GF JED-357.1
VIII	Fe JED-048 M1/phos./JED-371

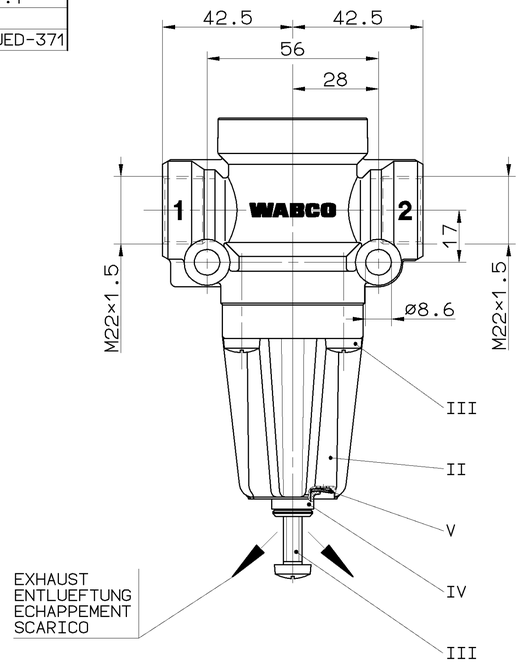

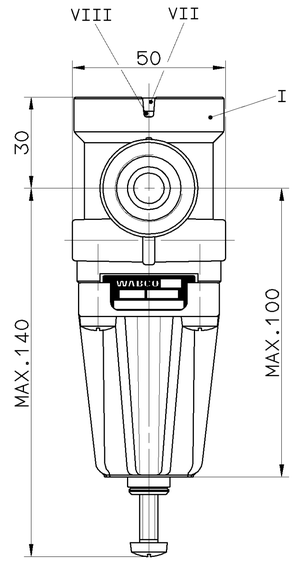

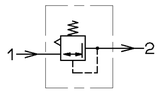

MEDIUM: AIR
MEDIUM: LUFT
FLUIDE: AIR
FLUIDO: ARIA

THERMAL RANGE OF APPLICATION:
THERMISCHER ANWENDUNGSBEREICH:
GAMME D'APPLICATION THERMIQUE: -40° ...+80° C
CAMPO DI APPLICAZIONE TERMICA:

NOMINAL DIAMETER / NENNWEITE / DIAMETRE NOMINAL / DIAMETRO NOMINALE	SUPPLY: / BELUEFTUNG: / ALIMENTATION: / ALIMENTAZIONE:	ø10	EXHAUST: / ENTLUEFTUNG: / ECHAPPEMENT: / SCARICO:	ø4

INSTALLATION POSITION AS DRAWN
EINBAULAGE WIE GEZEICHNET
POSITION D'INSTALLATION SUIVANT DESSIN
POSIZIONE DI MONTAGGIO COME DISEGNATO ±45°

PROTECTED / GESCHUETZT / PROTEGES / PROTETTI ±90°

1 = INLET PRESSURE / EINGESTEUERTER DRUCK / PRESSION D'ALIMENTATION / PRESSIONE DI ALIMENTAZIONE — p_e max.= 20bar

2 = DELIVERY PRESSURE / AUSGESTEUERTER DRUCK / PRESSION DELIVREE / PRESSIONE EROGATA

TORQUE FOR CONNECTIONS:
ANZUGSMOMENT FUER EINSCHRAUBSTUTZEN:
COUPLE DE SERRAGE DES RACCORDS:
COPPIA DI SERRAGGIO DEI RACCORDI: M22×1.5: $M_{max.}$= 53 Nm

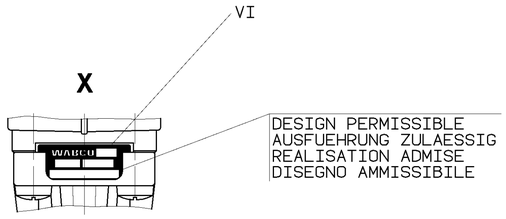

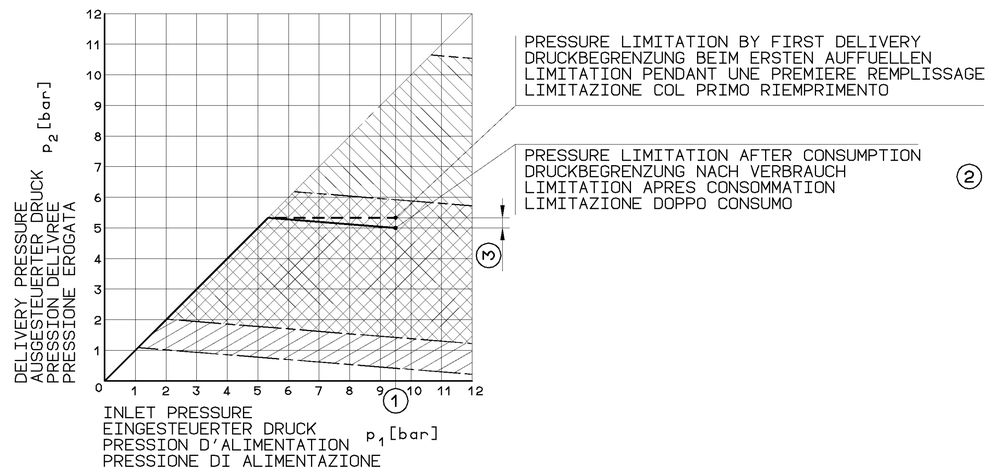

① P_1 [bar]	② P_2 [bar]	③ MAX. [bar]	WABCO	CUSTOMER'S NO. / KUNDEN-NR. / NO. CLIENT / NO. CLIENTE	RANGE OF ADJUSTMENT / EINSTELLBEREICH / GAMME DE REGLAGE / CAMPO DI REGOLAZIONE
8	$1.4^{+0.3}_{0}$	0.6	475 010 324 0		
7.5	$3.3^{+0.3}_{0}$	0.4	475 010 313 0		
7.5	$5.5^{+0.2}_{0}$	0.4	475 010 312 0		
8.5	$3.5^{+0.3}_{0}$	0.4	475 010 311 0		
7.5	$4^{+0.3}_{0}$	0.4	475 010 310 0		
7.5	$5.7^{+0.3}_{0}$	0.4	475 010 309 0		
10	$7.8^{+0.3}_{0}$	0.4	475 010 308 0		
8	$1.8^{+0.3}_{0}$	0.6	475 010 307 0		
9.5	$5^{0}_{-0.2}$	0.4	475 010 306 0		
7.5	$6^{0}_{-0.3}$	0.4	475 010 305 0		
12	$7.5^{+0.3}_{0}$	0.4	475 010 304 0		
7.5	$1.8^{+0.3}_{0}$	0.6	475 010 303 0		
7.5	$5.3^{+0.3}_{0}$	0.4	475 010 302 0		Ⓐ
12.5	$10^{\pm 0.3}$	0.4	475 010 301 0		
IDENTIFICATION					

TOUTE COMMUNICATION OU REPRODUCTION DE CE DOCUMENT, TOUTE EXPLOITATION OU COMMUNICATION DE SON CONTENU NON ET PERMISES SAUF AUTORISATION EXPRESSE. TOUS DROITS SONT RESERVES EN CAS DE DELIVRANCE DE BREVET, DE MODELE D'UTILITE OU DE MARQUE DE FABRIQUE.

NON E PERMESSO CONSEGNARE A TERZI O RIPRODURRE QUESTO DOCUMENTO, NE UTILIZZARE IL CONTENUTO O RENDERLO COMUNICARE AI PRIMI. TUTTI I DIRITTI SONO RISERVATI IN CASO DI CONCESSIONE DI BREVETTO, DI MODELLO DI UTILITÀ O DI MARCHIO DI FABBRICA.

MITTEILUNG DRITTEN UND VERVIELFÄLTIGUNG DIESER UNTERLAGE SOWIE VERWERTUNG UND MITTEILUNG IHRES INHALTS NICHT GESTATTET, SOWEIT NICHT AUSDRÜCKLICH ZugESTANDEN. ZuZUGESTANDEN FÜR DEN FALL DER ERTEILUNG EINES PATENTS ODER EINES GebRAUCHSMUSTERS ODER EINTRAGUNG VON EINEM WARENZEICHEN.

NO PERMITTED TO DISCLOSE THIS DOCUMENT, AND GIVING IT TO OTHERS AND THE USE OF COMMUNICATION OF THE CONTENTS THEREOF, NOT PERMITTED WITHOUT EXPRESS AUTHORITY. ALL RIGHTS RESERVED IN THE EVENT OF GRANTING A PATENT, A UTILITY MODEL OR REGISTRATION OF A TRADEMARK.

THIS DOCUMENT IS THE SUBJECT OF COPYRIGHT.

GENERAL SPECIFICATION:	JED-334
FURTHER TECHNICAL DATA:	
DOC. CODE:	SHEET: TO

GENERAL TOLERANCES

CLASS 1)	RANGE OF NOMINAL DIMENSIONS (± mm) ≤50	>50 ≤180	>180 ≤400	>400	
FINE	0,5	1,0	1,5	2,0	
MEDIUM X	1,0	2,0	3,0	4,0	± 3°
COARSE	2,0	3,5	5,0	6,5	

TAPPED HOLES ACC. ISO 4029 / ~~JED-462~~

1) TOLERANCE CLASS APPLIED CROSSMARKED

DCN-NO.	REV.	DATE
057070	1xA	95-04-05

100mm

CADAM-DRAWING COPYRIGHT

DATE	SIGNATURE
DRAWN. 95-01-30	MAURER/LIPPELT
CHECKED. 95-02-10	KIEL/DEIKE
STANDARDIZATION. 95-02-21	PANTZER

WABCO

PRESSURE LIMITING VALVE
DRUCKBEGRENZUNGSVENTIL
VALVE DE LIMITATION DE PRESSION
VALVOLA LIMITATRICE DI PRESSIONE

MASS	SCALE	PRODUCT IDENTIFICATION NO.	DOC. CODE	SHEET
0.37 KG	1:1	475 010 399 0	653	1/1
SIZE A 1	T.R.I. 140	SHAPE CODE	REPLACEMENT FOR	

EXPERT CODE 7 4 3

PRODUCT TYPE 0 0 X

1000/016/3/04.93

608/023