Tous droits de propriété industrielle réservés. Riservati tutti i diritti in caso di concessione di brevetti o di registrazione di un modello di utilità.
All rights are reserved in the event of the grant of a patent or the registration of a utility model or design. Alle Rechte für den Fall der Patenterteilung oder Gebrauchsmuster-Eintragung vorbehalten.
COPYRIGHT BY WABCO WESTINGHOUSE GMBH HANNOVER

TORQUE
ANZUGSMOMENT MAX. 40 Nm (J)
COUPLE DE SERRAGE
COPPIA DI SERRAGGIO

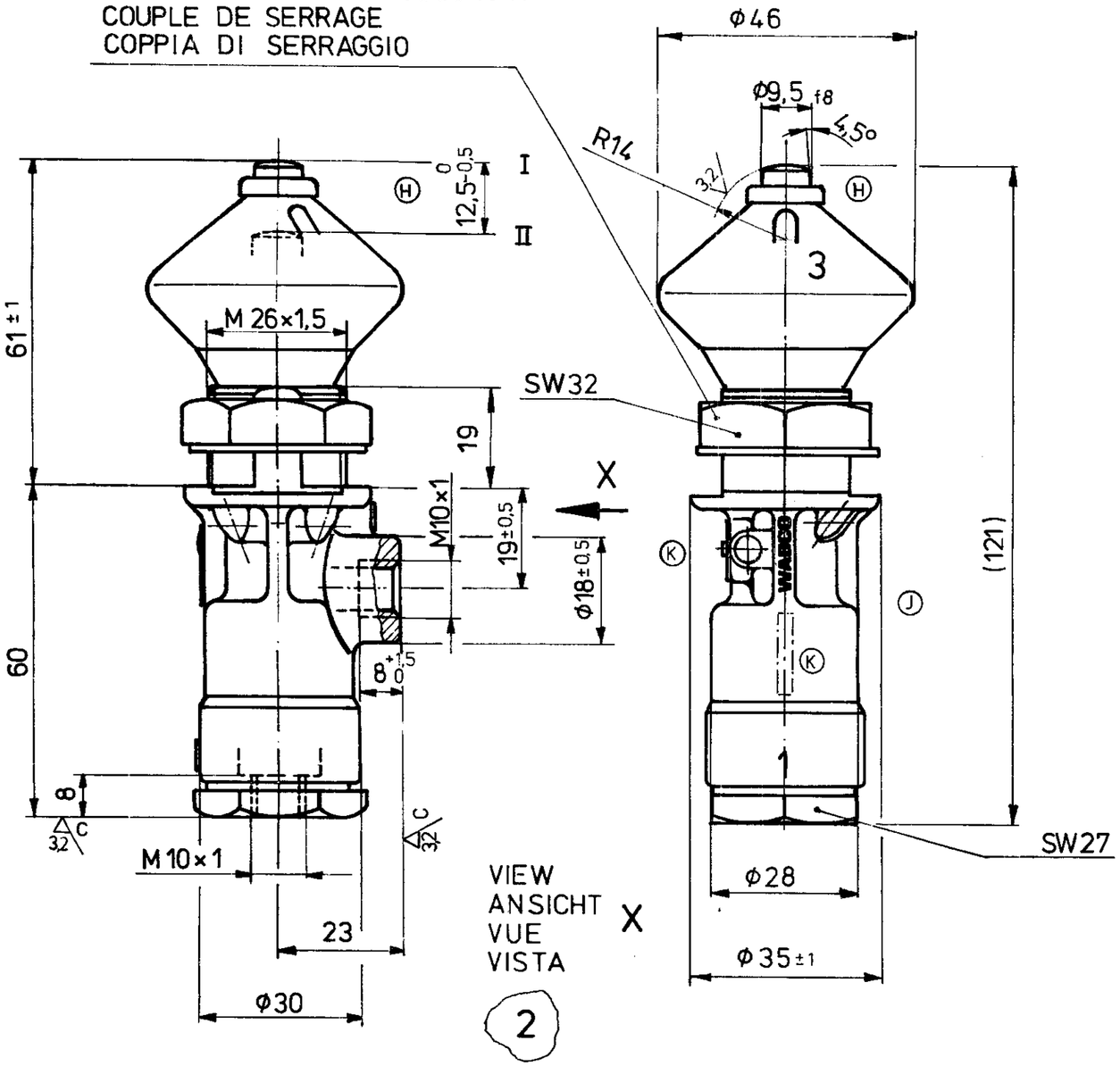

TECHNICAL DATA, TECHNISCHE DATEN
DONNEES TECHNIQUES, DATI TECNICHI.

NOMINAL DIAMETER NENNWEITE DIAMETRE NOMINAL DIAMETRE NOMINALE	4 mm
WORKING PRESSURE BETRIEBSDRUCK PRESSION D'UTILISATION PRESSIONE DI ESERCIZIO	MAX. 10 bar
THERMAL RANGE OF APPLICATION THERM. ANWENDUNGSBEREICH GAMME D'APPLICATION THERMIQUE CAMPO DI APPLICATIONE THERMICA	-40 ÷ +100°C
OPERATING FORCE AT 7 bar BETAETIGUNGSKRAFT BEI 7 bar EFFORT DE COMMANDE A 7 bar FORZA DI COMMANDO PER 7 bar	MAX. 150 N (K)
MEDIUM MEDIUM FLUIDE FLUIDO	AIR LUFT AIR ARIA
STROKE LIMIT EXTERNALLY HUBBEGRENZUNG EXTERN LIMITE DE COURSE EXTERNE LIMITAZIONE DI CORSA ESTERNO	
STROKE HUB COURSE CORSA	12,5 0 -0,5 mm
DIMENSIONS WITHOUT TOLERANCES MASSE OHNE TOLERANZANGABE DIMENSIONS NON TOLERANCEES DIMENSIONI NON TOLLERATE	± 1,5 mm

1 SUPPLY, ENERGIEZUFLUSS VOM VORRAT
ALIMENTATION, ALIMENTAZIONE

2 DELIVERY, ENERGIEABFLUSS IN DIE ARBEITSLEITUNG
UTILISATION, MANDATA

3 EXHAUST, ENTLUEFTUNG, ECHAPPEMENT, SCARICO

(K) POSITION OF INSTALLATION / EINBAULAGE / POSITION D' INSTALLATION / POSIZIONE DI MONTAGGIO — OPTIONAL / BELIEBIG / AU CHOIX / A PIACERE

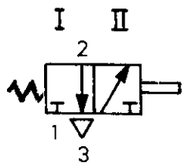

CHANGE NO	LETT	DATE
24268	1 (K)	81-03-16
18714	2 (J)	78-02-16
14784	(H)	76-06-29
	(G)	76-03-26
	(F)	76-03-22
	(E)	76-3-9
	(D)	
	(C)	
	(B)	
	(A)	

REPLACEMENT FOR (E)
ORIG. 463 022 020 0
V. 75-06-13

DATE	SIGNATURE
DRAWN 76-03-09	
CHECKED 76-03-09	
STANDARDIZATION 76-03-09	

WABCO WESTINGHOUSE

3/2 DIRECTIONAL CONTROL VALVE
DISTRIBUTEUR 3/2
VALVOLA 3/2
3/2 WEGEVENTIL

MASS	SCALE	IDENTIFICATION CODE
0,2 Kg	1:1	463 022 020 0
SIZE A3	T.R.I. 140	1/1

CODE FOR FUNCTION	CODE FOR SHAPE	CODE FOR MATERIAL
		605

100 mm.