	MATERIAL AND SURFACE PROTECTION		
I	Al , JED-029M1	C , JED-259	
II	POM , JED-005M1		
III	Fe , JED-051M4	Zn/C , JED-256-1	
IV	Fe , JED-020-0	Zn/C , JED-256-1	
V	TE , JED-612-0		
VI	STAINLESS STEEL NICHTROSTENDER STAHL ACIER INOXYDABLE ACCIAIO INOX JED-058M2		
VII	Fe , 8.8	Zn/C ,JED-256	

	MATERIAL AND SURFACE PROTECTION		
VIII	PA 6.6 , JED-354-1		
IX	Fe , JED-049MO Ⓑ	Zn/C , JED-256-1	
X	CuZn 40752 , DIN 17660		

461 315 263 0

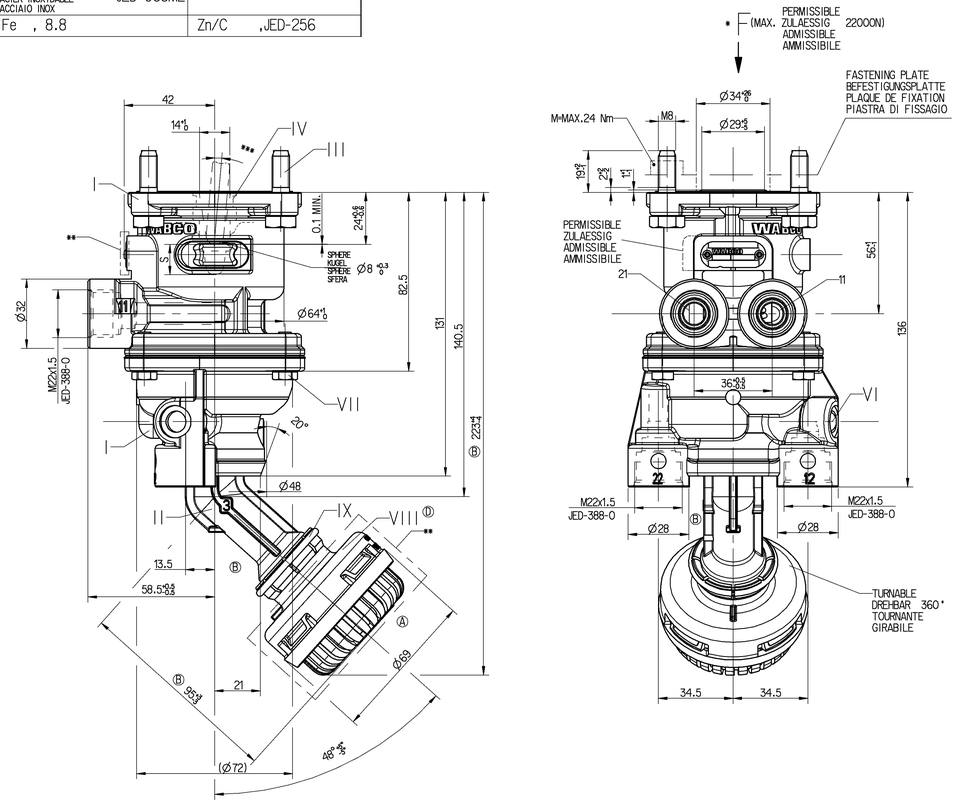

461 315 264 0

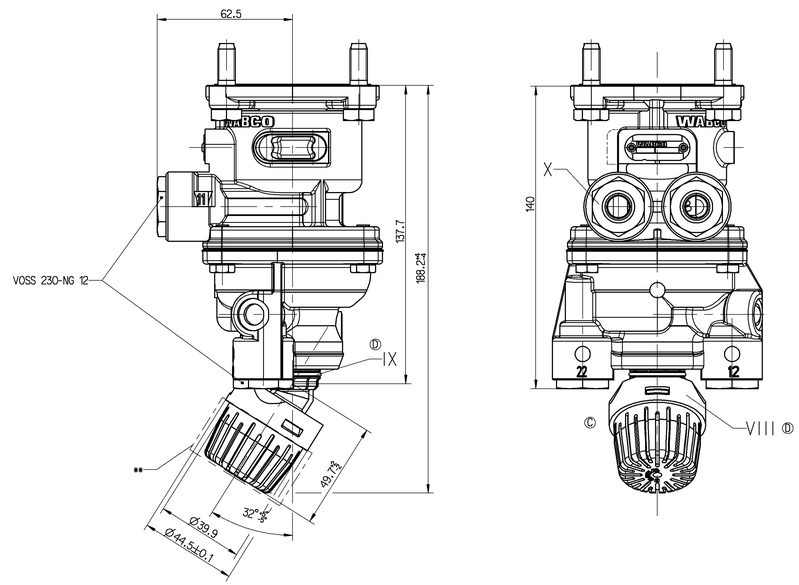

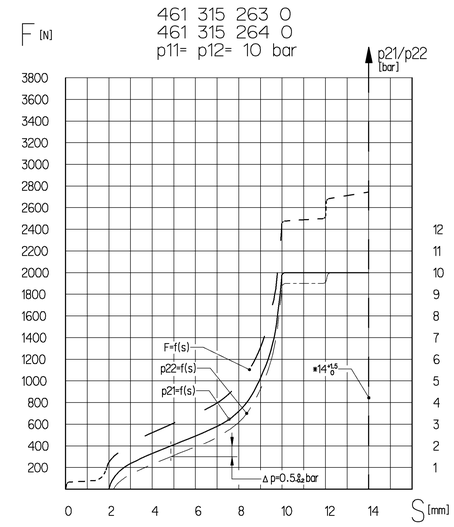

AT FAILURE CIRCUIT 1: NECESSARY COURSE S ≥ 14 mm
NECESSARY FOURCE F = 2600 N
BEI AUSFALL KREIS 1: ERFORDERLICHER WEG S ≥ 14 mm
ERFORDERLICHE KRAFT F = 2600 N
EN CAS DE DEFAILNCE: COURSE NECESSARIA S ≥ 14 mm
CIRCUIT 1 FORCE NECESSARIA F = 2600 N
IN CASO DI DIFETTO: CORSA NECESSARIA S ≥ 14 mm
CIRCUITI 1 FORZA NECESSARIA F = 2600 N

	SUPPLY VORRAT ALIMENTATION ALIMENTAZIONE		OUTLET AUSGANG SORTIE USCITA		EXHAUST ENTLUEFTUNG ECHAPPEMENT SCARICO
11/12		21/22		3	

* STOP WITHIN THE DEVICE ADMISSIBLE
ANSCHLAG IM GERAET ZULAESSIG
BUTEE DANS L APPARAIL ADMISE
ARRESTO NEL APPARATO AMMISSIBILE

MEDIUM: AIR
MEDIUM: LUFT
FLUIDE: AIR
FLUIDO: ARIA

THERMAL RANGE OF APPLICATION :
THERMISCHER ANWENDUNGSBEREICH: -40 C°... +80 C°
GAMME D'APPLICATION THERMIQUE:
CAMPO TERMICO D'APPLICAZIONE :

NOMINAL DIAMETER :
NENNWEITE : 78.5mm² ≙Ø10
DIAMETRE NOMINAL :
DIAMETRO NOMINALE:

WORKING PRESSURE :
BETRIEBSDRUCK : pe = MAX. 10.2 bar
PRESSION D'UTILISATION:
PRESSIONE DI ESERCIZIO:

TEMPORARILY:
KURZZEITIG: pe = MAX. 13 bar
DE COURTE DUREE:
BREVE TEMPO SOLO:

INSTALLATION POSITION : EXHAUST SHOWN AT BASE(AXIS CENTRE OF DEVICE DEVIATES MAX.45° FROM VERTICAL)
EINBAULAGE : NACH UNTEN(MITTELACHSE DES GERAETES MAX 45° VON DER SENKRECHTEN ABWEICHEND)
POSITION D' INSTALLATION : ECHAPPMENT VERS LA BAS(ECART DE L'AXE MEDIAN DE L'APPAREIL PAR RAPPORT A LA VERTICALE:45° MAX)
POSIZIONE DI MONTAGGIO : SCARICO VERSO IL BASSO(DEVIAZIONE ASSE APPARECCHIO RISPETTO ALLA VERTICALE:MAX.45°)

TORQUE FOR CONNECTIONS:
ANZUGSMOMENT FUER EINSCHRAUBSTUTZEN: M22 x1.5: M = MAX. 53Nm
COUPLE DE SERRAGE DES RACCORDS:
COPPIA DI SERRAGGIO DEI RACCORDI:

** MARKED AREA FREE FROM PAINT; VENTILATION
MARKIERTER BEREICH FREI VON FARBE; BEATMUNG
PATIE MARQUEE SANS PEINTURE; VENTILATION
PARTE SEGNATA SENZA VERNICE; VENTILAZIONE

*** ALL ROUND :
ALLSEITIG : MAX.5°
SUR TOUS LES COTES :
SU CIASCUN LATO :

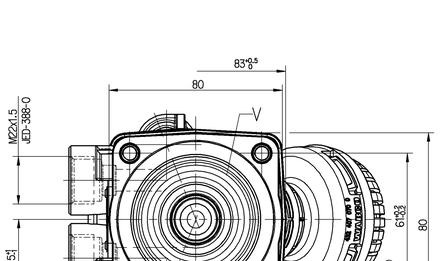

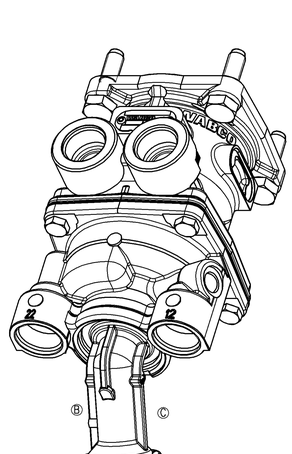

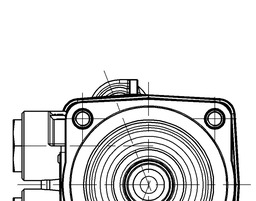

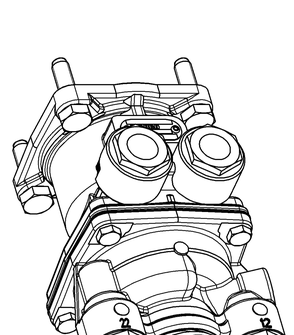

461 315 263 0	A 004 431 41 05	
461 315 264 0	A 004 431 46 05	
WABCO	CUSTOMER+S NO. KUNDEN-NR. KZ NO. CLIENT NO. CLIENTE	ZGS
IDENTIFICATION NO.		

GENERAL SPECIFICATION: JED-334-0
FURTHER TECHNICAL DATA:
DOC. CODE: SHEET: TO

GENERAL TOLERANCES

CLASS (1)	RANGE OF NOMINAL DIMENSIONS (± mm) ≤ 50	> 50 ≤ 180	> 180 ≤ 400	> 400	
FINE	0.5	1.0	1.5	2.0	
MEDIUM X	1.0	2.0	3.0	4.0	±1°
COARSE	2.0	3.5	5.0	6.5	
TAPPED HOLES ACC. ISO XXXXXXXXXX					

(1) TOLERANCE CLASS APPLIED CROSSMARKED

DCN-NO.	REV.	DATE
076549	3xD	01-02-23
069749	2xC	99-11-26
069745	7xB	99-09-06
069734	1xA	99-06-30

Pro/ENGINEER DRAWING COPYRIGHT
DATE SIGNATURE
DRAWN 99-06-21 SOMMER
CHECKED 99-06-21 MARTINI
EXPERT CODE 7 3 6

WABCO
BRAKE VALVE
MOTORWAGEN-BREMSVENTIL
ROBINET DE FREINAGE
DISTRIBUTORE DI COMANDO

MASS 1.22 kg | SCALE 1:1 | PRODUCT IDENTIFICATION NO. 461 315 271 0 | DOC. CODE 653 | SHEET 1/1
SIZE A0 | TRI 140 | FUNCTION CODE | SHAPE CODE | PRODUCT TYPE 0 0 | REPLACEMENT FOR